TYPICAL DETAIL OF BOX BEAM SEAT

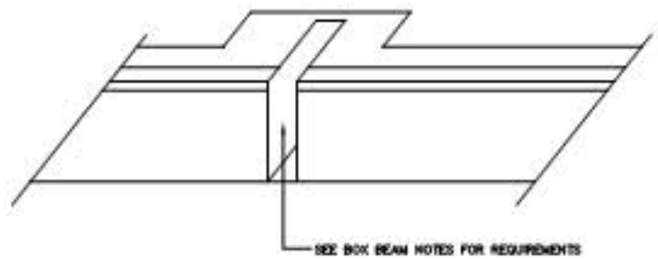

FIGURE 1

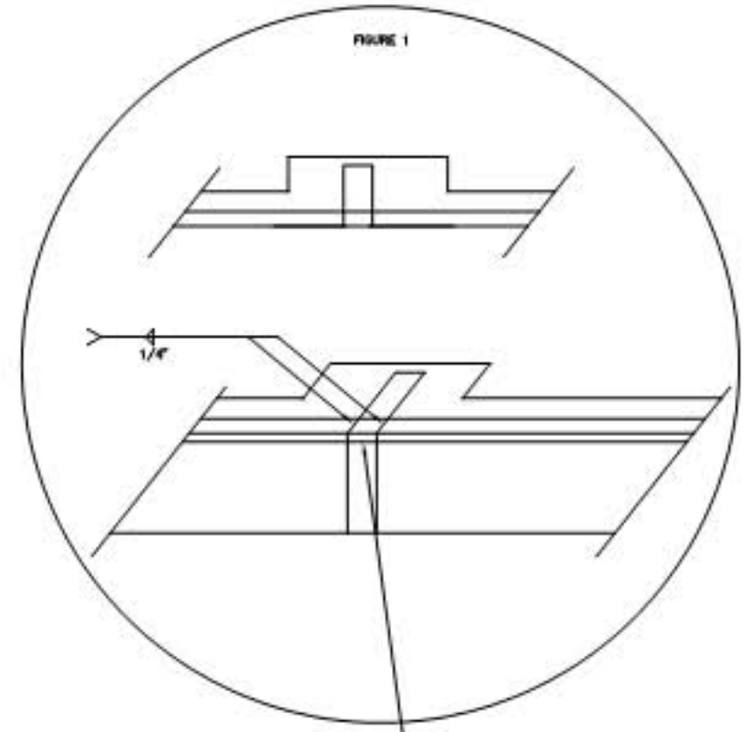

FIGURE 2

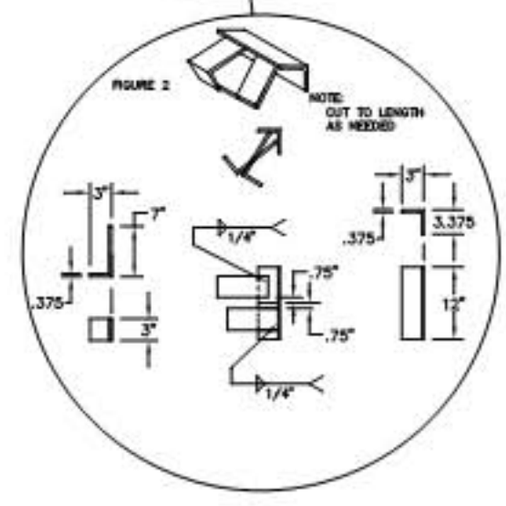

REFER TO FIGURE 1 AND FIGURE 2 AND BOX BEAM NOTES

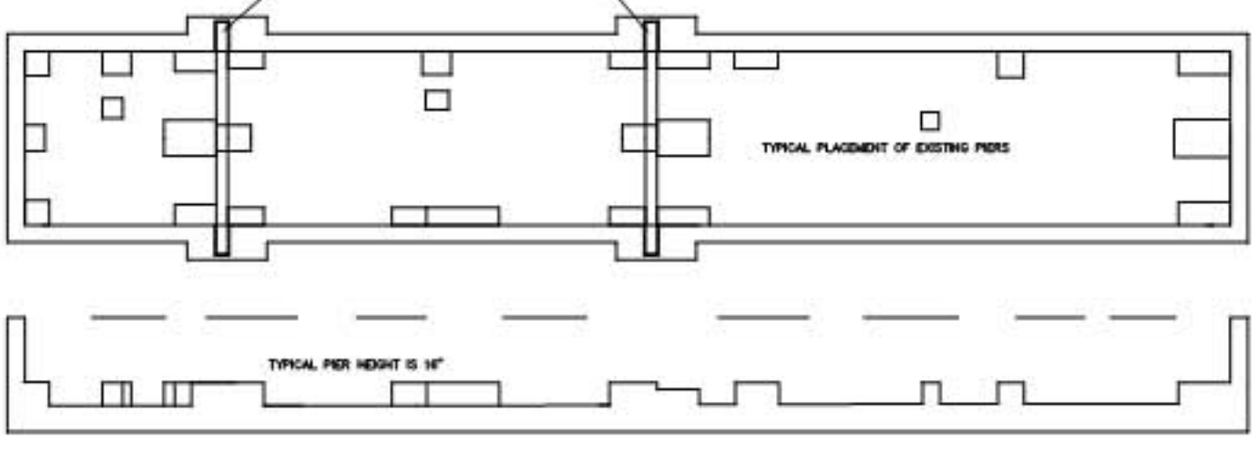

APPROVALS: SIGNATURE & DATE	DEPARTMENT OF MOTOR VEHICLES 2300 WEST BROAD STREET RICHMOND, VIRGINIA 23220
DRAWN R. WILTON	
DESIGN ENG. J. SPENCER	
TOLERANCE FRACTIONS ± 1/16" ANGLES ± 0	NEW CONFIGURATION
NOTES: SEE NOTE PAGE FOR ALL REQUIREMENTS	SIZE D · DRAWING NO. DEC19 · REV.
	PLOT SCALE 1/4"=1'0" · DGN · SHEET 1 OF 1